THIS DRAWING IS PROPERTY OF OCEANVOLT LTD, AND IT MAY NOT BE USED, COPIED NOR BE LEFT TO A THIRD PARTY WITHOUT OUR CONSENT.
THIS IS A CAD GENERATED DRAWING. DO NOT UPDATE MANUALLY, UNLESS OTHERWISE SPECIFIED DIMENSIONS ARE IN mm.

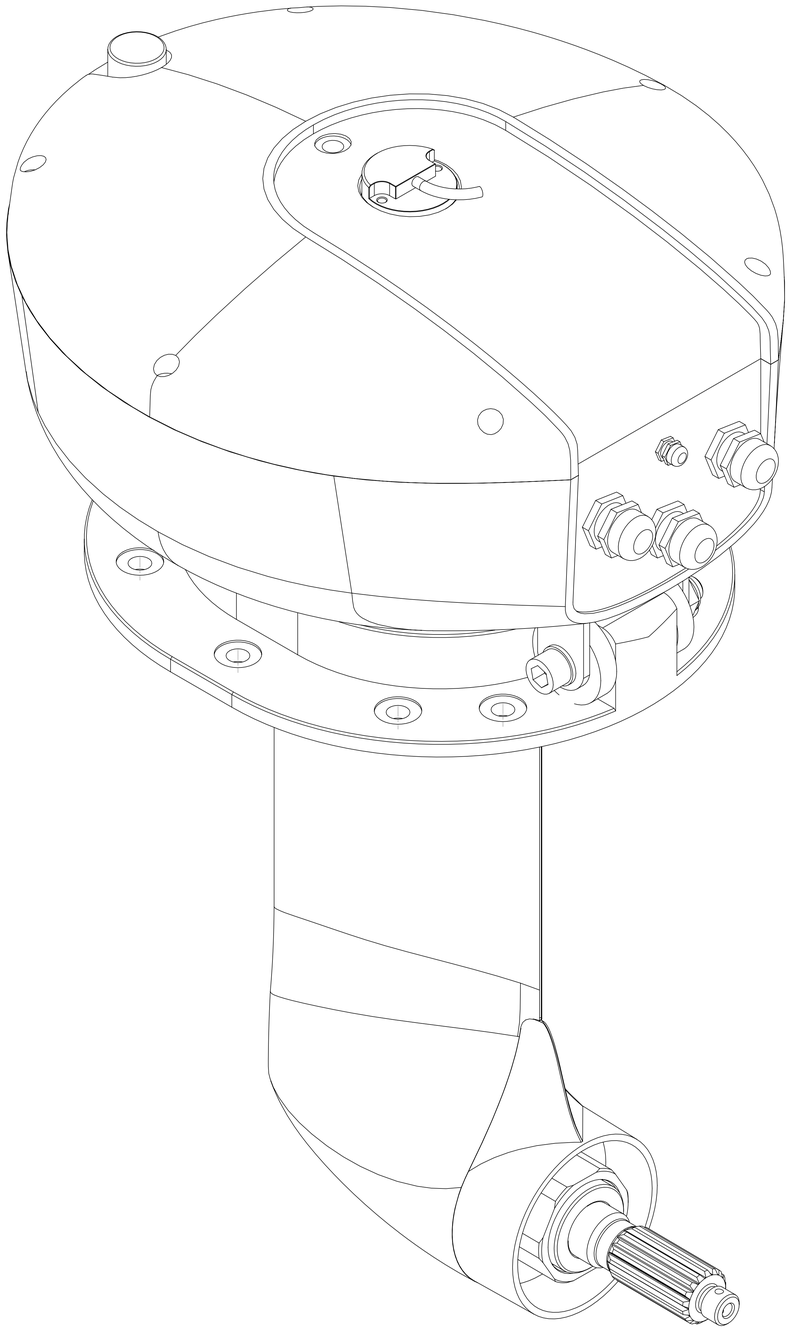

OCEANVOLT	FINISH	TOLERANCE:	WEIGHT kg
	APPROVALS / DRAWN:	DATE: 02/04/15	SD with Oceanvolt mounting flange
	CHECKED		
	APPROVED		SIZE A0 DWG. NO. _SD_Oceanvolt
DO NOT SCALE DRAWING	SCALE 1:1		CAD FILE: SD_Oceanvolt SHEET 1 OF 7

THIS DRAWING IS PROPERTY OF OCEANVOLT LTD. AND IT MAY NOT BE USED, COPIED NOR BE LEFT TO A THIRD PARTY WITHOUT OUR CONSENT.
THIS IS A CAD GENERATED DRAWING. DO NOT UPDATE MANUALLY, UNLESS OTHERWISE SPECIFIED DIMENSIONS ARE IN mm.

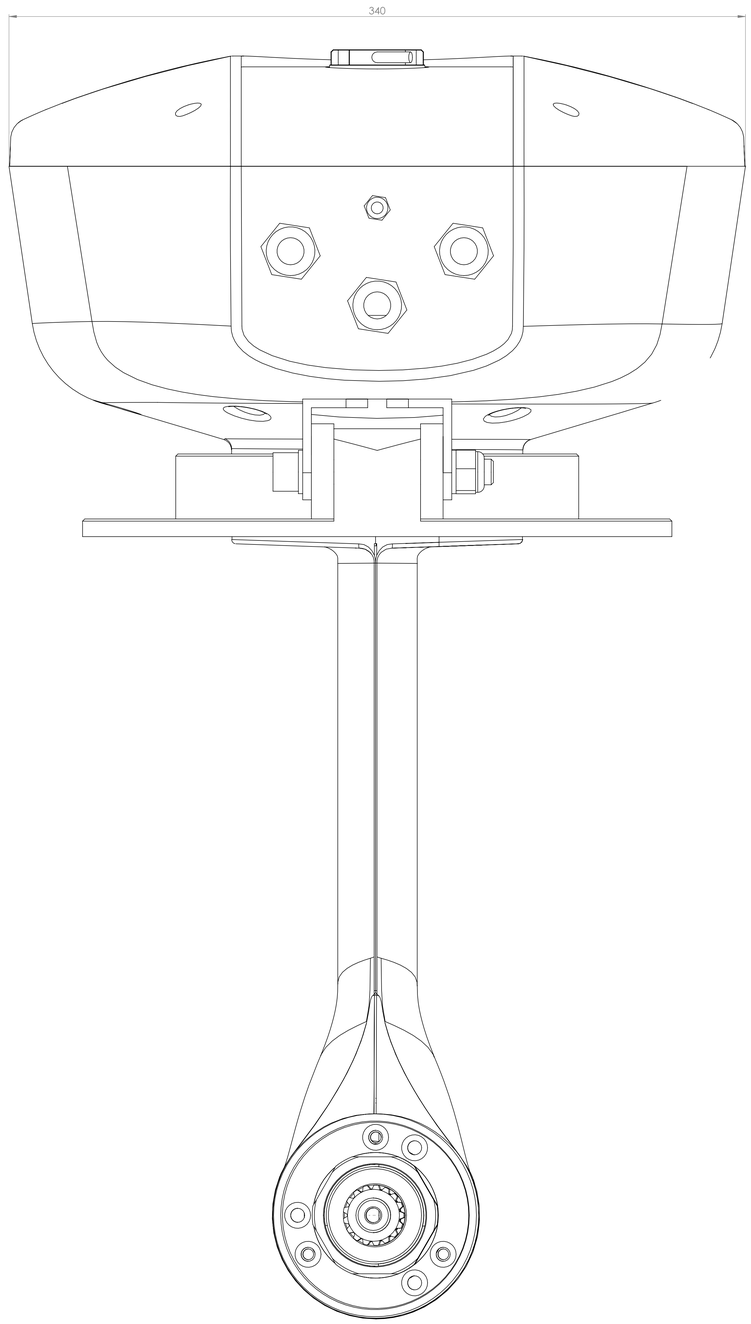

OCEANVOLT	FINISH	TOLERANCE	WEIGHT (g)
	APPROVALS DRAWN	DATE 02/04/15	SD with Oceanvolt mounting flange
	CHECKED		
	APPROVED	SIZE A0	DWG NO. SD_Oceanvolt
DO NOT SCALE DRAWING	SCALE 1:1	CAD FILE: SD_Oceanvolt	SHEET 3 OF 7

THIS DRAWING IS PROPERTY OF OCEANVOLT LTD. AND IT MAY NOT BE USED, COPIED NOR BE LEFT TO A THIRD PARTY WITHOUT OUR CONSENT.
THIS IS A CAD GENERATED DRAWING. DO NOT UPDATE MANUALLY, UNLESS OTHERWISE SPECIFIED DIMENSIONS ARE IN mm.

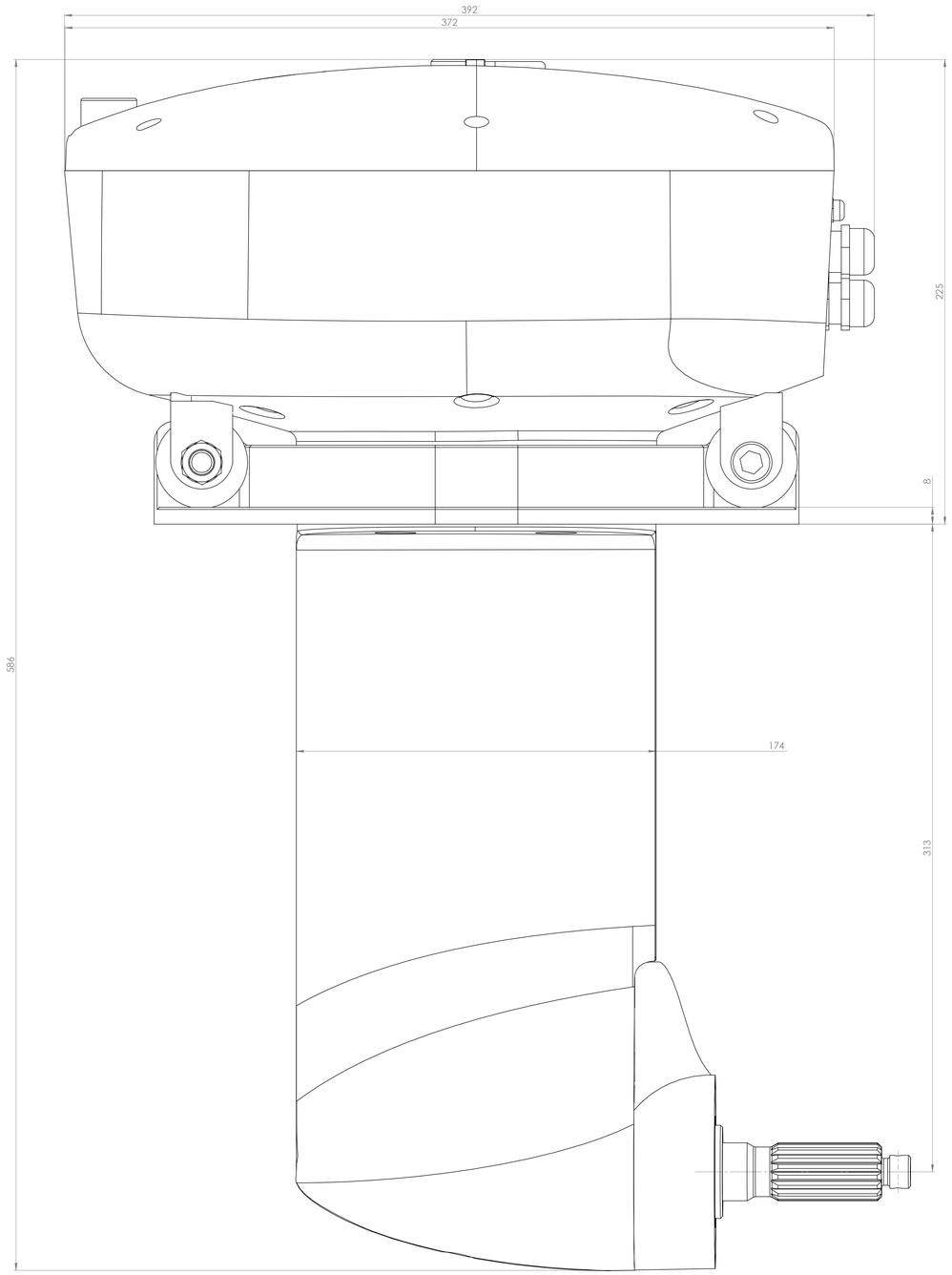

OCEANVOLT	FINISH	TOLERANCE:	WEIGHT (g)
	APPROVALS DRAWN:	DATE 02/04/15	SD with Oceanvolt mounting flange
	CHECKED		
	APPROVED		SIZE / DWG. NO. A0 SD_Oceanvolt
DO NOT SCALE DRAWING	SCALE 1:1		CADFILE: SD_Oceanvolt SHEET 5 OF 7

THIS DRAWING IS PROPERTY OF OCEANVOLT LTD. AND IT MAY NOT BE USED, COPIED NOR BE LEFT TO A THIRD PARTY WITHOUT OUR CONSENT.
THIS IS A CAD GENERATED DRAWING. DO NOT UPDATE MANUALLY, UNLESS OTHERWISE SPECIFIED DIMENSIONS ARE IN mm.

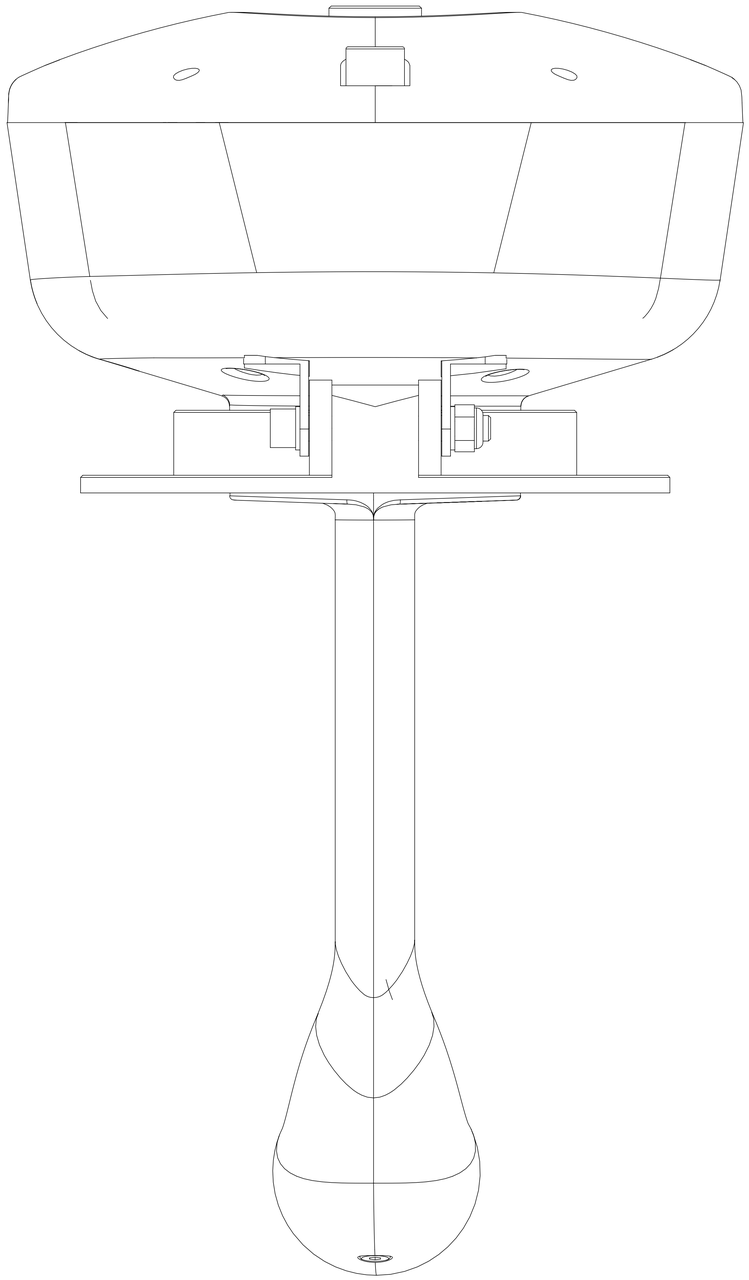

OCEANVOLT	FINISH		TOLERANCE:	WEIGHT (g)
	APPROVALS / DRAWN:	DATE: 02/04/15	SD with Oceanvolt mounting flange	
	CHECKED			
	APPROVED		SIZE / DWG. NO. A0 SD_Oceanvolt	
DO NOT SCALE DRAWING	SCALE 1:1		CAD FILE: SD_Oceanvolt	SHEET 4 OF 7

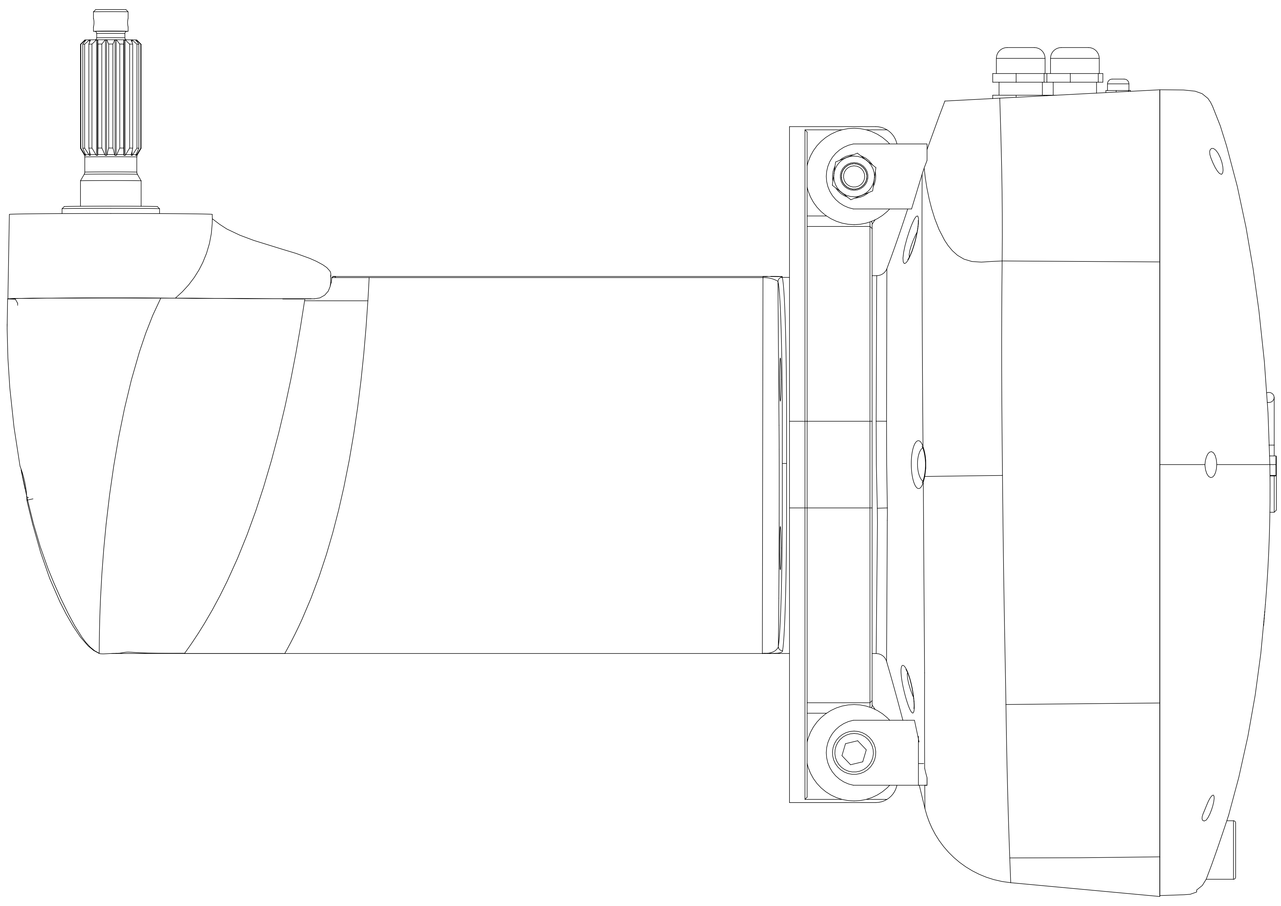

THIS DRAWING IS THE PROPERTY OF OCEANVOLT. IT MAY NOT BE REPRODUCED OR DISCLOSED WITHOUT WRITTEN PERMISSION.

TITLE:		TOLERANCE:	
SD with Oceanvolt mounting flange			
DWG. NO: A0_SD_Oceanvolt			
SCALE 1:1			

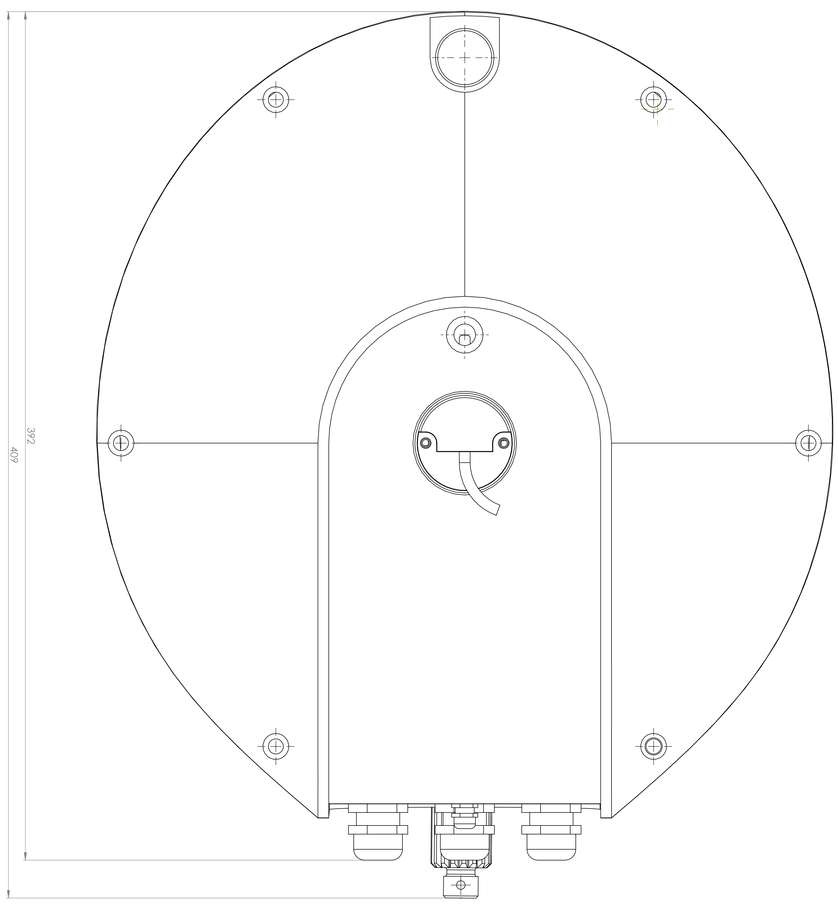

THIS DRAWING IS THE PROPERTY OF OCEANVOLT. IT MUST NOT BE REPRODUCED OR DISCLOSED WITHOUT WRITTEN PERMISSION.

FINISH

DEBURR AND BREAK SHARP EDGES

TOLERANCE

UNLESS OTHERWISE SPECIFIED:
DIMENSIONS ARE IN MILLIMETERS
SURFACE FINISHES:
ANGULAR: MACH ± 30' BEND ± 1°

DRAWN

CHECKED

ENG APPR.

MGR APPR.

COMMENTS:

ISO - SO
with Oceanvolt mounting flange

OCEANVOLT

SIZE A0

DWG NO. A0_SO_Oceanvolt

SCALE 1:1

WEIGHT:

SHEET 1 OF 1

Do not scale drawing

Oceanvolt Flange
Flange for Oceanvolt

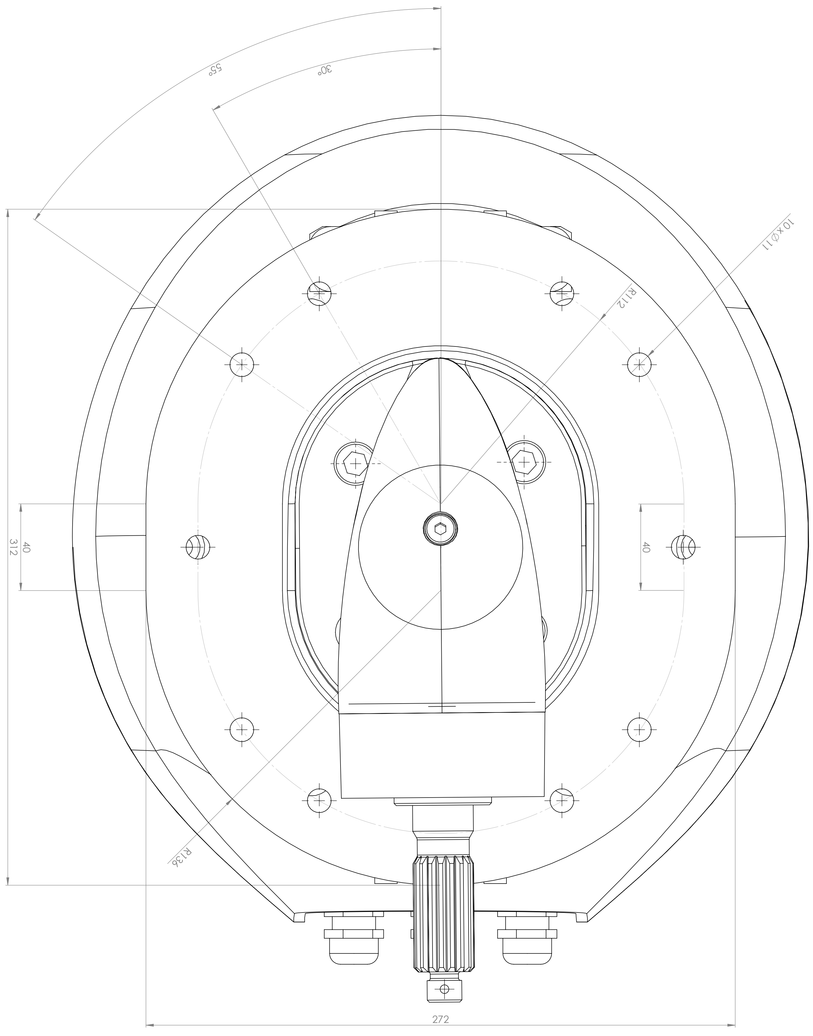

THIS DRAWING IS PROPRIETARY TO OCEANVOLT LTD. COPY, DISTRIBUTION OR DISCLOSURE TO THIRD PARTIES WITHOUT WRITTEN PERMISSION IS PROHIBITED.

OCEANVOLT	DRAWN		TOLERANCE
	APPROVED / DATE	10 with Oceanvolt mounting flange	WEIGHT (g)
	CHECKED / DATE		
	Freudenfeld		
	SCALE 1:1	DWG NO. A0_SD_Oceanvolt	
	Do not scale drawing	Oceanvolt SD Schematic	Sheet 1 Of 1